Vinyl & Cork Underlay
Underlay Sheets

substrate for vinyl & cork floor coverings

Vinyl & Cork Underlay - smooth, durable & termite proof

Build it better with **BGC**

BGC Fibre Cement

Australian Owned & Manufactured www.bgc.com.au/fibrecement

Product Description & Information

BGC Vinyl and Cork Underlay sheets have been designed, tested and manufactured to provide a smooth, durable and completely termite and rodent proof surface on which to lay vinyl & cork tiles. The sheets are also immune to water damage and will not swell. Vinyl and Cork Underlay sheets can also be used under parquetry floor tiles.

BGC Vinyl & Cork Underlay sheets are manufactured to comply with Australian Standards AS 2908.2 - 1992 Cellulose Cement Products - Part 2 Flat Sheets. They are also referred to in AS 1884 - 1985 Floor Coverings Resilient Sheet and Tiles - Laying and Maintenance Practises.

Mass & Appearance

The approximate weight is 8.0 kg /m2 at equilibrium moisture content (7%). The sheet has a printed nailing pattern to assist in correct installation.

Fire Resistance

BGC Vinyl & Cork Underlay fibre cement sheet is non-combustible (Building Code of Australia C1 C1.1). The Early Fire Hazard Indices in accordance with AS1530.3-1989 are:

Ignitability	0	Heat Evolved	0
Spread of Flame	0	Smoke Developed	0 - 1

Health & Safety

As manufactured, the product will not release airborne dust. However during drilling, cutting and sanding operations cellulose fibres, silica and calcium silicate dust may be released. Breathing in fine silica dust is hazardous and prolonged exposure (usually over several years), may cause bronchitis, silicosis or cancer.

Quality Systems

BGC Ceramic Tile Floor Underlay sheets are manufactured under the rigorous Quality Management System of the International Standard ISO 9002:1994. BGC Fibre Cement is the holder of Licence Agreement number QEC2955/13.

Sheet Size

BGC Vinyl & Cork Floor Underlay is produced in **1200 x 900 x 5mm** square edged flat sheets.

Sheet Cutting & Drilling

Vinyl and Cork Tile Floor Underlay sheets may be cut to size on site. If using power tools for cutting, drilling or sanding they must be fitted with appropriate dust collection devices or alternatively an approved (P1 or P2) dust mask shall be worn by the operator. It is recommended that work always be carried out in a well-ventilated location.

The most suitable cutting methods are:

- **Score and Snap**
  Score the sheet face 4 or 5 times with a 'score and snap' knife. Snap the sheet upward for a clean break.
- **Hand Guillotine**
  Cut on the off-cut side of the line to allow for the blade thickness.
- **Hand Sawing**
  The back of the Vinyl and Cork Tile Floor Underlay sheet should be supported close to the cut. A fine toothed saw and a quick jabbing action gives best results. Mark out the cut lines on the face side of the sheet.
- **Drilling**
  Use normal high-speed drill bits. Do not use the drill's hammer function. For small round holes such as floor drains and water pipes, a hole-saw is recommended. For other penetrations, drill a series of small holes around the perimeter of the cut out. Tap out the waste piece from the sheet face with a hammer while supporting the underside of the opening to avoid damage. Clean rough edges with a rasp.

Handling & Storage

BGC Vinyl and Cork Underlay sheets must be stacked flat, up off the ground and supported on level bearers. The sheets must be kept dry, preferably by being stored inside a building. When stored outdoors they must be protected from the weather.

Care should be taken to avoid damage to the ends, edges and surfaces.

Sheets must be dry prior to being fixed, or sealed.

Preparation

Prior to fixing sheets, the ventilation under the floor should be checked. Any underfloor area should be dry and remain free from damp. Floorboards should be checked for flatness and sanded, if required. Any loose boards should be firmly nailed into place. The floor should be clean and dry prior to fixing the underlay sheets

Sheet Layout

A few minutes spent planning the job will generally pay dividends in reduced cutting and wastage. For a simple layout, place a run of loose sheets across the area, followed by a line of loose sheets down the area. The sheet edges can be overlapped as required to mimic the location of cuts. An inspection of the layed out sheets will enable the optimum cutting and joining positions to be established. (At 1200mm x 900mm the sheets are easily managed).

Sheets are to be laid with the long edges perpendicular to the direction of the floor boards. Joints in the sheets must not coincide with floorboard joints. The joints of the sheets must be staggered. Refer to fig.1

Figure 1 - Sheet Layout

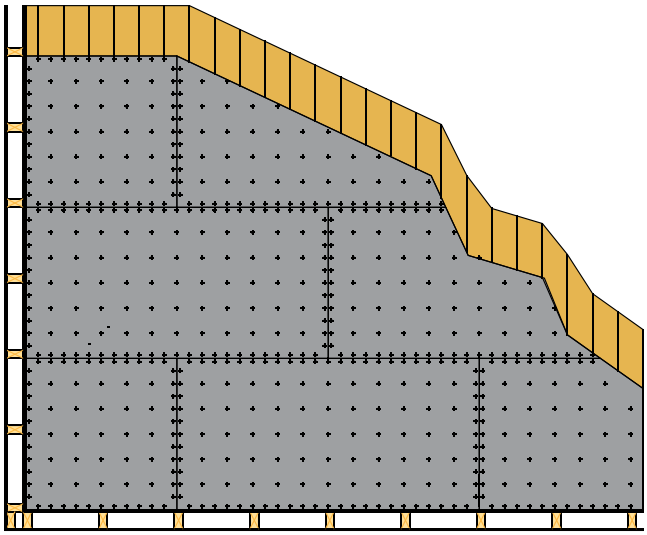

Note: Underlay sheets to run perpendicular to floorboards. Stagger joints in underlay sheets

Sheet Fixing

- Prior to fixing, sheets should be checked that they are dry and free from dust, dirt, oil and grease. Ensure that sheets are butted against one another.
- If possible, try and keep cut edges towards the walls.
- Sheet edges should be kept approximately 3mm from the wall and any protrusions such as cupboards etc.
- If sheets are being laid on plywood or particle board, a wallboard adhesive should be used to fix sheets according to the adhesive manufacturer's specifications.
- BGC recommends that 25x2.5mm Annular Threaded Underlay Nails or 22-25mm narrow crowned chisel point staples (galvanised or copper etched) be used in all other situations.
- Nails or staples should be fixed at 75mm max centres around perimeter and 150mm max centres in field as shown in Figure 2.
- Nails should be driven flush and staples should finish approximately 0.5mm below the sheet surface.

Figure 2 - Sheet Fixing

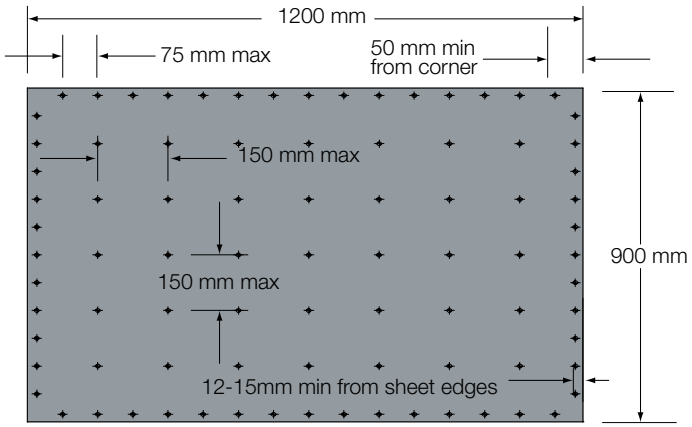

Installation of Floor Coverings

Prior to the installation of floor coverings, the floor must be made level. All sheet joints and any raised areas should be flush-sanded and thoroughly clean. If cork is to be laid, the underlay sheet joints should be sealed with PVA Acrylic Sealant. Lay vinyl, cork or parquetry according to manufactuer's recommendations.

Warranty

BGC warrants its products to be free from defects caused by faulty manufacture or materials. If any of its products are so defective the Company will at its option, repair or replace them, supply equivalent replacement products or reimburse the purchase price. This warranty shall not apply to any loss or consequential loss suffered through or resulting from defects caused by faulty manufacture or materials.

Fittings or accessories supplied by third parties is beyond the control of BGC and as such is not warranted by BGC.

To contact your nearest BGC stockist, please call:

Adelaide
Telephone
08 8347 0844

Brisbane
Telephone
07 3711 4744

Melbourne
Telephone
03 9392 9444

Perth
Telephone
08 9334 4900

Sydney
Telephone
02 9632 2100

New Zealand
Telephone
0011 64 9264 1457

bgc.com.au/fibrecement

BGC Fibre Cement is a proud Australian owned manufacturer of Fibre Cement products.

BGC has state-of-the-art manufacturing facilities in Perth and distribution centres in all states of Australia and in New Zealand.

Our distribution network ensures that our entire product range is readily available in all states of Australia. All products in the BGC range are 100% Australian manufactured.

BGC has a team of technical specialists who can assist with all specification and design information.

BGC provides builders, developers and architects with a range of design alternatives and innovative products, such as:

External products and applications:

- NuLine™ – weatherboard cladding system.
- Durasheet™ – used for external applications. Durasheet is ideal for the cladding of gables and lining eaves, carports and verandahs. Can also be used for commercial soffits and external cladding on non impact areas.
- Duratex™ – a base sheet used for textured coatings on external wall applications.
- Compressed sheet – used for domestic, commercial sheet for wet areas, flooring, partitions, external decking, fascia and facade cladding.
- Duraplank™ – available in Smooth, Woodgrain and Rusticated finishes, Duraplank™ is ideal for external cladding of upper storey conversions or ground level extensions.
- Duracom™ – compressed fibre cement facade system
- Silhouette™ – a fibre cement plank and uPVC feature strip exterior cladding system.
- Stonesheet™ – purpose designed substrate for stone tile facade.
- Duralattice™ – square or diamond patterned lattice, suitable for screens, pergolas and fences.

Internal products and applications:

- Duraliner™ – an internal lining board, this is the perfect substrate for tiles and is ideal for wet areas.
- Duralux™ – internal lining board suitable for ceilings and soffits.
- Ceramic tile underlay – a substrate for ceramic and slate floor tiles.
- Vinyl cork floor coverings – a substrate for vinyl floors.

Safe working practices - Please wear a P1 or P2 mask and safety goggles (approved to AS/NZW1337 standards) whilst cutting or installing Duraliner™. Duraliner™ can be safely handled during unloading or stacking without the use of these precautions.
Cleaning up - Always wet down your work area when cutting Duraliner™, to ensure that dust is managed.
Dispose of any vacuumed dust with care and using containment procedures.